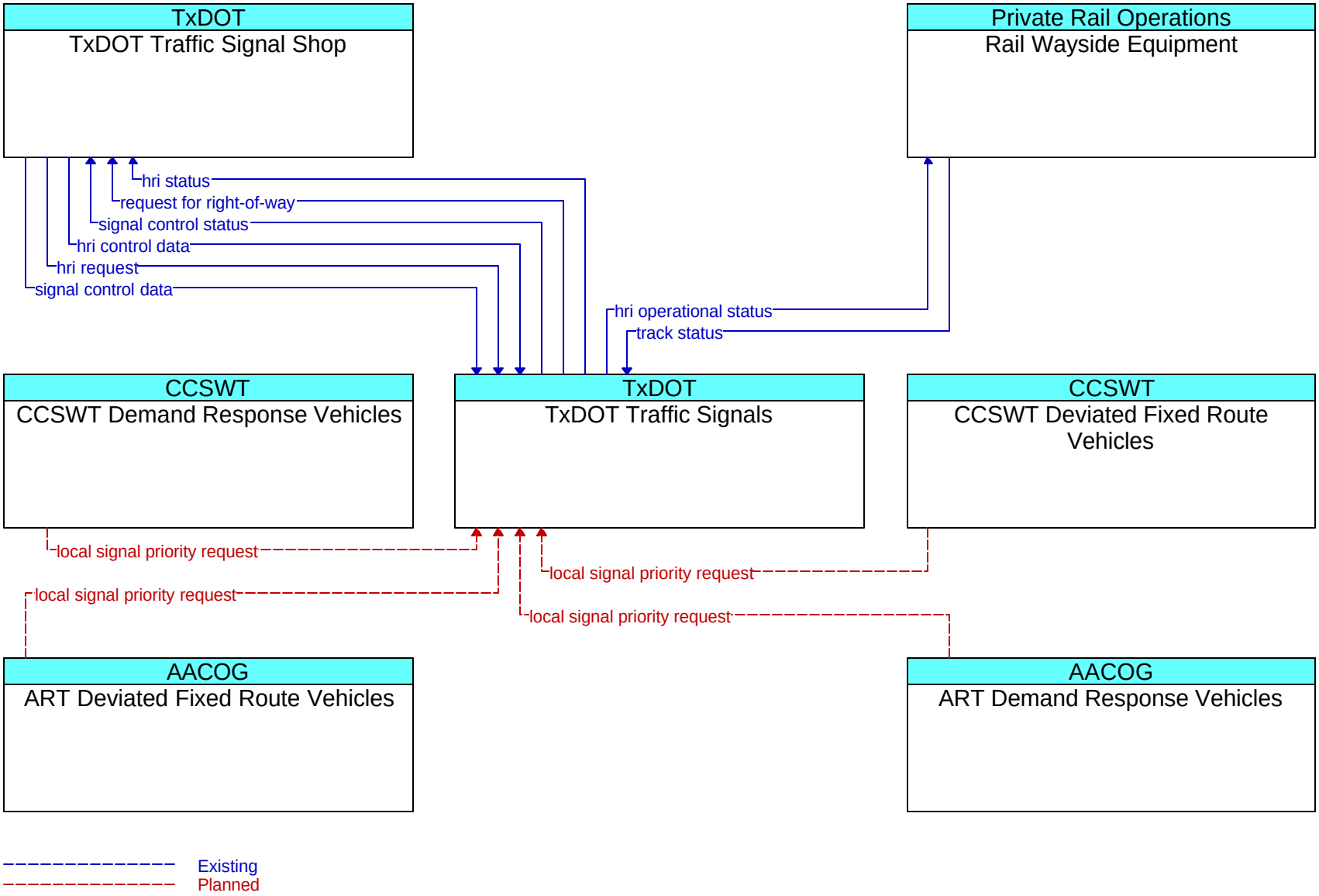
TxDOT
TxDOT Traffic Signal Shop
Private Rail Operations
Rail Wayside Equipment
hri status
request for right-of-way
signal control status
hri control data
hri request
signal control data
hri operational status
track status
CCSWT
CCSWT Demand Response Vehicles
TxDOT
TxDOT Traffic Signals
CCSWT
CCSWT Deviated Fixed Route Vehicles
local signal priority request
local signal priority request
local signal priority request
local signal priority request
AACOG
ART Deviated Fixed Route Vehicles
AACOG
ART Demand Response Vehicles
Existing
Planned